Functional Devices, Inc.
(800) 888-5538 sales@functionaldevices.com www.functionaldevices.com

TRANSFORMER

TR175VA002

Transformer 175 VA, 120 to 24 Vac, Foot and Dual Threaded Hub Mount

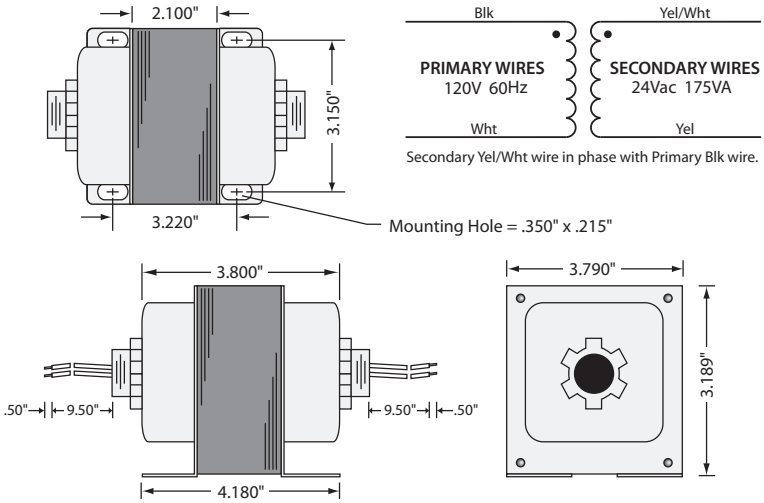

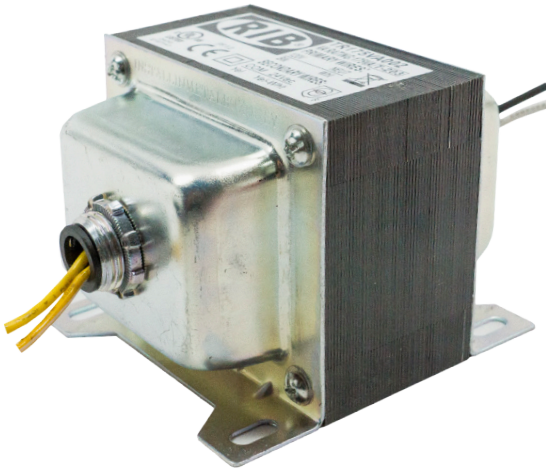

SPECIFICATIONS

VA Rating:	175
Frequency:	50/60 Hz
Mounting:	Foot & Dual Threaded Hubs
Over Current Protection:	None
Dimensions:	3.800˝ x 3.790˝ x 3.189˝ (w/ .500˝ NPT Hubs)
Wire Length:	9.5˝ Typical w/ .5˝ Strip
Operating Temperature:	-30 to 140° F
MTBF:	100,000 Hours @ 77° F
Construction:	Split-Bobbin
Weight:	7.10 lbs.
Approvals:	UL5085-2 Listed General Purpose, C-UL, CE, RoHS